DOMUS

WINNING THE FUTURE THROUGH INNOVATION

DTM-28/36 COMFORT TUMBLE DRYERS

M PROGRAMMER

New M programmer: push buttons to control temperature and time

OUTSTANDING FEATURES

Reversing drum action as standard
Stainless steel drum as standard
Frequency inverter as standard

EFFICIENCY

DOUBLE FLOW - mixed axial-radial airflow
Big fluff filter

VERSATILITY

Make to order - customisation
OPL > Multivending - Standard OPL model easily trasformable to coin laundry uses

ERGONOMICS

Drawer as fluff filter, made of stainless steel
Biggest door diameters
Opening sense of door adjustable on site

MAINTENANCE

Hinged panel: easy and ergonomic access
Technical menu: statistics, alarm, autotest, data recovery for technicians and maintenance with M console

OTHERS

Grey skinplate outer casing, stainless steel look
SOFT DRY - new drum with stamped holes
COOL DOWN - anti-wrinkle at the end of the cycle
Heating options: electric, gas and steam
CE approved

OPTIONS

- New M Control with display
- M Control programming console
- Double doorglass
- Reverse door opening
- Rear panel external air + filter
- Stainless steel steam battery
- Low pressure steam battery
- Wooden packing
- Exhaust silencer Ø200
- Ship voltage for electric models: 440V III 50/60 Hz No neutral

TECHNICAL DATA	UNIT.	DTM-28 COMFORT		DTM-36 COMFORT	
CAPACITY					
Capacity 1/18	Kg	31		37	
Capacity 1/20	Kg	27		33	
Hourly Output COMFORT*	Kg/h	59,3		63,9	
Evaporation capacity COMFORT*	l/h	30,9		32,1	
DRUM					
Ø Drum	mm	947		947	
Ø Door	mm	802		802	
Door center height	mm	1.040		1.040	
Load hole bottom height	mm	640		640	
Drum length	mm	780		936	
Drum volume	l	550		660	
POWER					
Drum motor power	Kw	0,55		0,55	
Fan motor power COMFORT	Kw	0,55		0,55	
Electric heating power ALL RANGES	Kw	30		36	
Total electric power (elec.model) COMFORT	Kw	31,15		37,15	
Gas heating power ALL RANGES	Kw	41		41	
Total electric power (gas model) COMFORT	Kw	1,15		1,15	
Steam heating power ALL RANGES	Kw	50,1		50,1	
Steam heating power (gas model) COMFORT	Kw	1,15		1,15	
CONNECTIONS		ELECTRICAL	STEAM / GAS	ELECTRICAL	STEAM / GAS
Tension 230V - I + N + T	Nº x mm2 / A	-	3 x 1,5 / 20A	-	3 x 1,5 / 20A
Tension 230V - III + T	Nº x mm2 / A	4 x 35 / 100A	3 x 1,5 / 20A	4 x 50 / 125A	3 x 1,5 / 20A
Tension 400V - III + N + T	Nº x mm2 / A	5 x 16 / 63A	3 x 1,5 / 20A	5 x 16 / 63A	3 x 1,5 / 20A
Ø Gas inlet	BSP	1/2"		1/2"	
Ø Steam inlet	BSP	1"		1"	
Ø Condensed (Steam models)	BSP	1"		1"	
DIMENSIONS / PACKING DIMENSIONS					
Net Width / Gross Width	mm	985/1.065		985/1.065	
Net Depth / Gross Depth	mm	1.054/1.154		1.210/1.310	
Net Height / Gross Height	mm	1.946/2.080		1.946/2.080	
Height without heating battery	mm	-		-	
Net weight / Gross weight	Kg	230/260		260/285	
OTHERS					
Max airflow COMFORT	m3/h	1.200		1.200	
Ø Fume exhaust	mm	200		200	
Sound level COMFORT	dB	65		65	

* It may vary depending on the type of heating, filter cleanliness or extraction type.

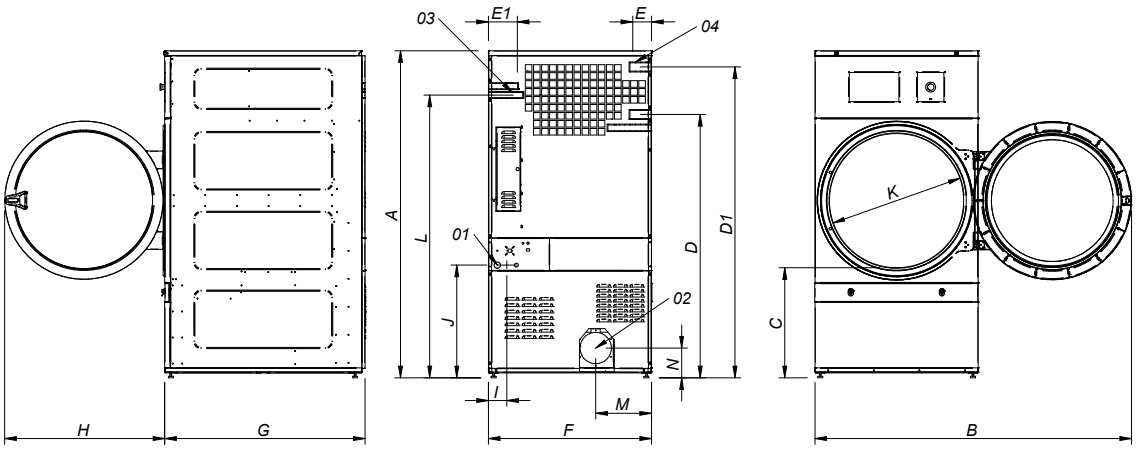

01 ELECTRIC CONNECTION
02 FUMES OUTLET Ø200
03 GAS CONNECTION 1/2"
04 STEAM CONNECTION 1"

	A	B	C	D	D1	E	E1	F	G	H	I	J	K	L	M	N
DTM-28	1946	1910	640	1590	1875	113	174	985	1054	957	110	680	802	1707	337	178
DTM-36	1946	1910	640	1590	1875	113	174	985	1210	957	110	680	802	1707	337	178